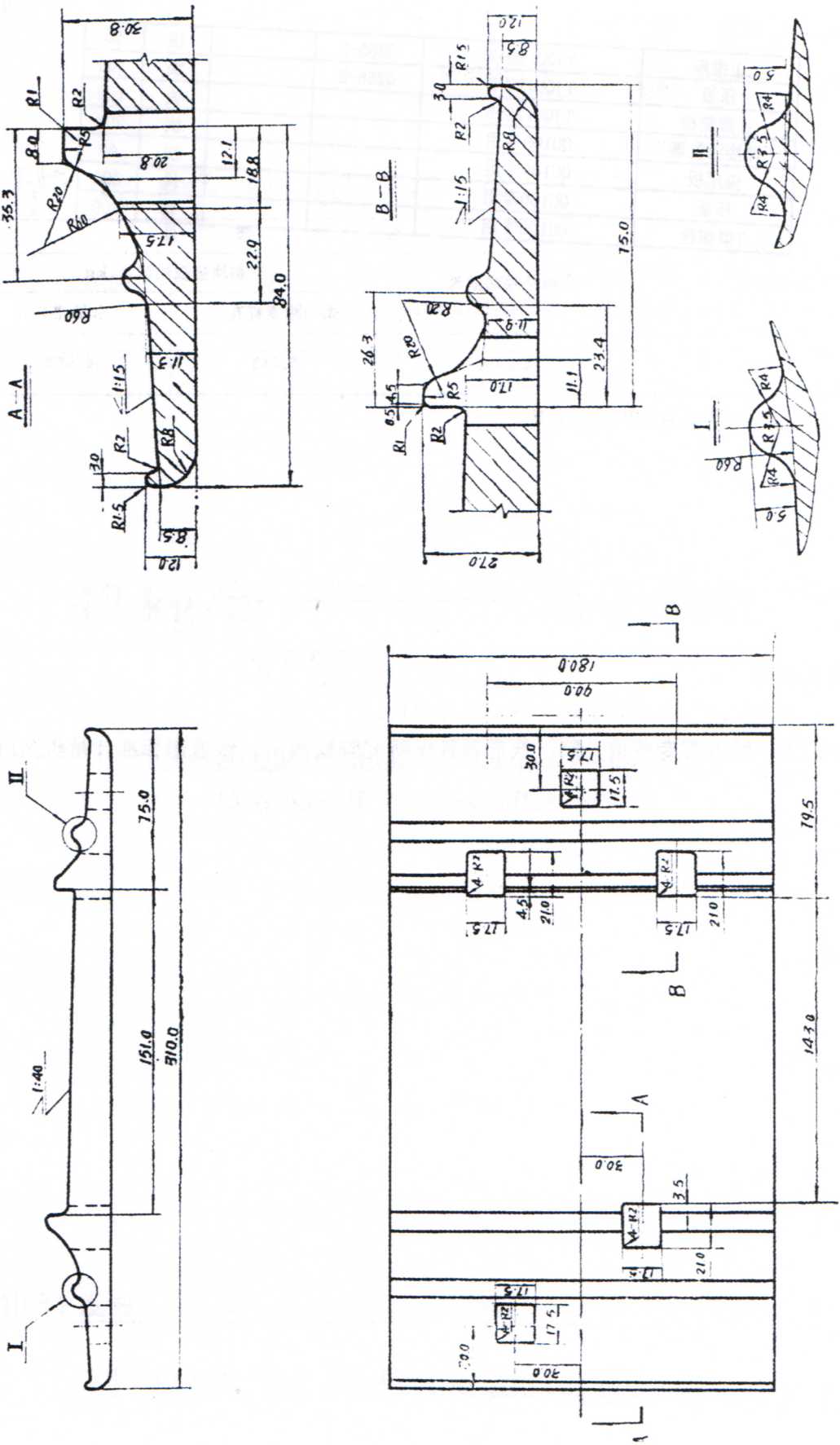
A—A
B—B
I
II
1:40
1:15
R60
R20
R8
R2
R1.5
R5
R3.5
R4
151.0
310.0
75.0
180.0
90.0
30.0
17.5
11.5
21.0
4.5
3.5
79.5
143.0
270.0
120
85
30
20.8
12.1
18.8
17.5
22.9
84.0
35.3
8.0
11.9
26.3
23.4
11.1
17.0
0.5
5.0

图 1